7 LITRE SOLID KITCHEN CADDY PRODUCT SPECIFICATION

Designed for the collection of food waste the 7 litre Solid Kitchen Caddy has a wide side-to-side opening enabling food waste to be easily emptied into it. The hinged lid retains moisture and keeps odours locked away and the durable one-piece carry handle forms a locking lid to ensure any spillage of contents is avoided. The caddy also has a liner trap to secure any compostable liners. The caddy is a proven solution for collecting food waste when used in conjunction with kerbside food waste caddies, garden waste wheeled bins or home composting units.

Dimensions and Print Areas

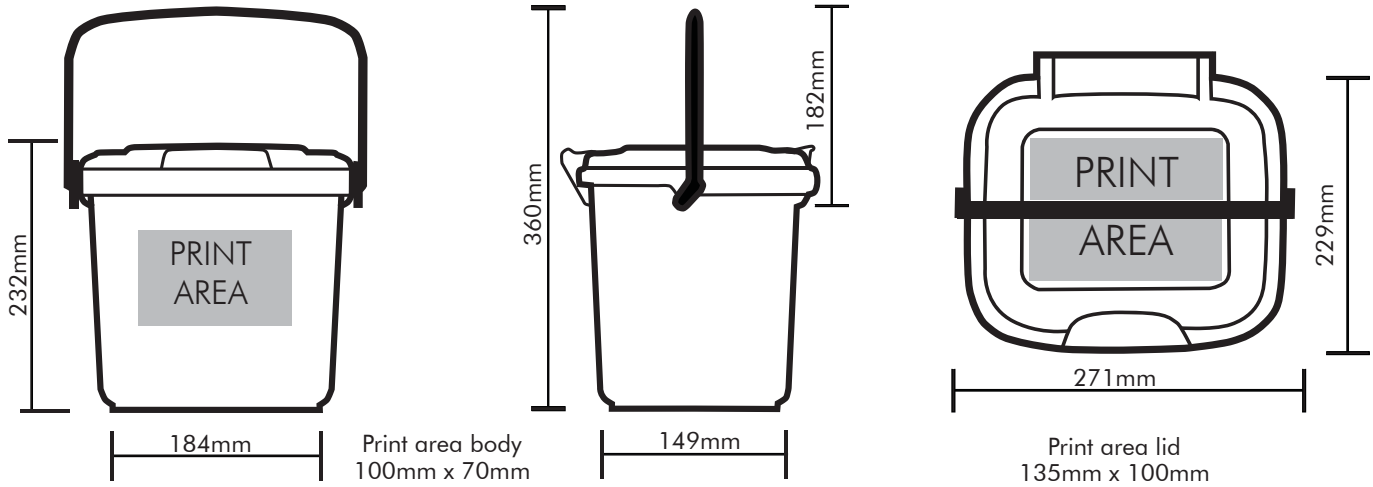

Prime (virgin) Standard Colour Range
Silver (CTM54)
Brown (CTM17)
Green (CTM66)

Swatches available on request for clarity. Bespoke shades available on individual quotation basis, dependent on quantity.

Specification

Capacity	7 litres
Approx Weight (empty)	Body 280g
	Lid 82g
Total weight 398g	Handle 36g

Packing
276 units per standard 1200mm x 1000mm pallet
52 double stacked pallets per load
14,352 units per load
Fully assembled in the manufacturing facility

Straight plc No 1 Whitehall Riverside Leeds LS1 4BN
T: +44 (0)113 245 2244 F: +44 (0)113 245 2255
E: info@straight.co.uk I: www.straight.co.uk

7 LITRE SOLID KITCHEN CADDY PRODUCT SPECIFICATION

Offloading
Offloading requires Fork Lift Truck. Alternative arrangements (tail-lift, pallet truck, moffett) available as optional extras to be covered at quotation stage.

End of Life Recycling
Upon end of life all of the Kitchen Caddy components are fully recyclable. 5 PP

Other Information
An Odour Control vented lid and a Vented Kitchen caddy are also available.

Tests
At 8 hour intervals a random sample of production is tested as follows:

1. Strength of Handles - Suspension test – set first complete unit aside to cool for two hours. Suspend loaded with 7kg for 1 hour, ensuring handle centrally placed on the rig.
2. Impact strength of base - 1 metre drop test with flat base impact on concrete loaded with 7kg
3. Handle lock test. Check full handle motion and thus, the locking mechanism and fit of the lid.

Warranty
All caddies are made from polypropylene and all materials used have a notched Izod rating (a measure of impact tolerance) of 5. We are happy to offer a 5 year guarantee on the caddy when manufactured in prime (also referred to as virgin) material and in reprocessed or in blended material. The guarantee is made on the basis that these products are utilised for intended purpose only, that is, collection of domestic food waste whilst stored internally within a property. Any perceived failure of product in circumstances where the caddy has been used for any other purpose or has been subject to anything other than normal operating conditions will not be covered by the terms of this guarantee.

Straight plc No 1 Whitehall Riverside Leeds LS1 4BN
T: +44 (0)113 245 2244 F: +44 (0)113 245 2255
E: info@straight.co.uk I: www.straight.co.uk